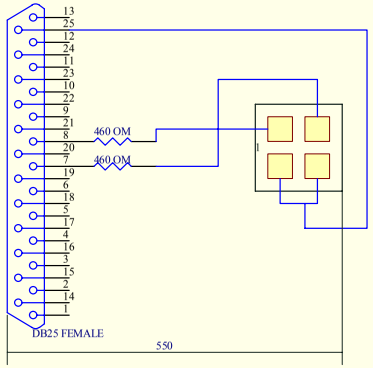

Title		
Size B	Number	Revision
Date: 17-Sep-2005		Sheet of
File: C:\Program Files\Design Explorer 99 SE\Projects\Consult cables\New Folder\DIGA CONSULT CABLES.ddb		Drawn By: