35/95XXX

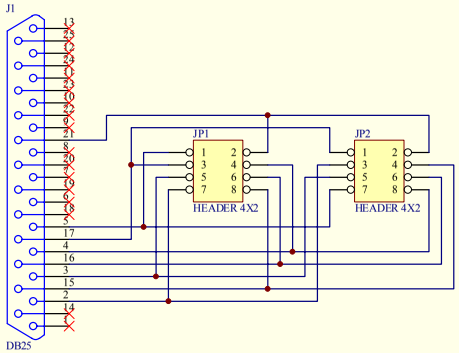

Title			
Size B	Number		Revision
Date: 17-Sep-2005		Sheet of	
File: C:\Program Files\Design Explorer 99 SE\Projects\Diga Consult cables\DIGA_CONSULT cables.ddb		Drawn By:	