ALFA 145/146

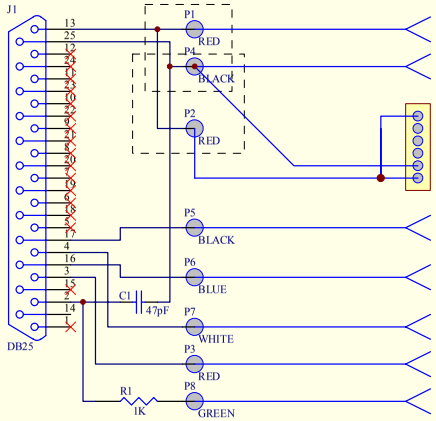

Title		
Size B	Number	Revision
Date: 17-Sep-2005	Sheet of	
File: C:\Program Files\Design Explorer 99 SE\Projects\Diga Consult cables\DIGA_CONSULT cables.ddb	Drawn By:	